# ES624

## 8 ZONE ANNUNCIATOR WITH SUPERVISION

DS!™
DESIGNED SECURITY, INC.
*1-800-272-3555*

**Note:**
For four zones use an
**ES614**
For twelve zones use an
**ES634**

**Specifications:**
**Power:** *12VDC at (300ma)*
**Input:** *N/C door contact*
**Output:** *N/O global alarm relay 500ma at 30 VDC*
**Output:** *N/C global alarm relay 500ma at 30 VDC*
**Output:** *N/C tamper alarm relay 500ma at 30 VDC*
**Horn Volume:** *70 db*
**Back box:** *3 Gange 2.5" deep*

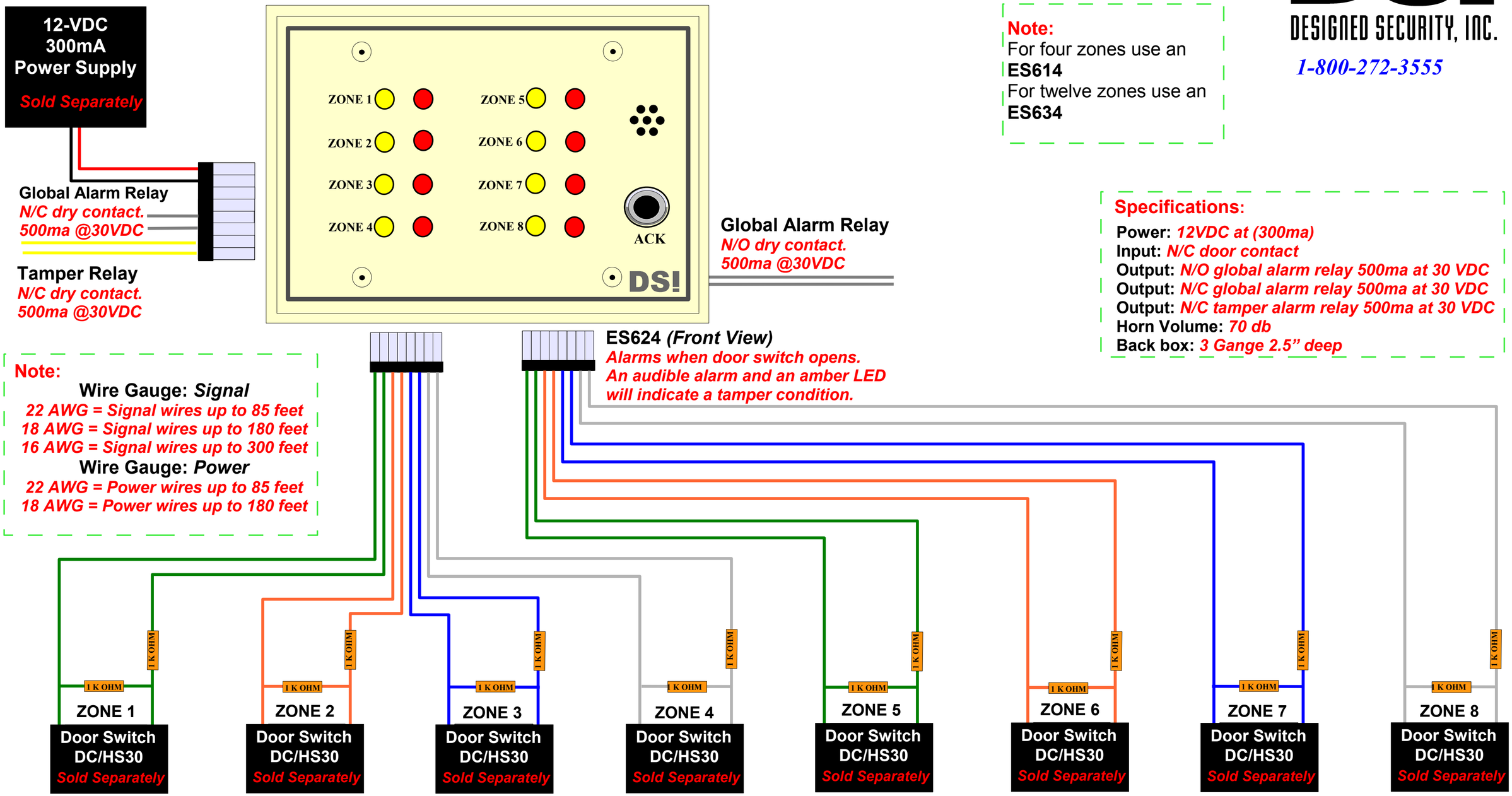


**Note:**
**Wire Gauge:** ***Signal***
*22 AWG = Signal wires up to 85 feet*
*18 AWG = Signal wires up to 180 feet*
*16 AWG = Signal wires up to 300 feet*
**Wire Gauge:** ***Power***
*22 AWG = Power wires up to 85 feet*
*18 AWG = Power wires up to 180 feet*