ES411-K1

2 Door

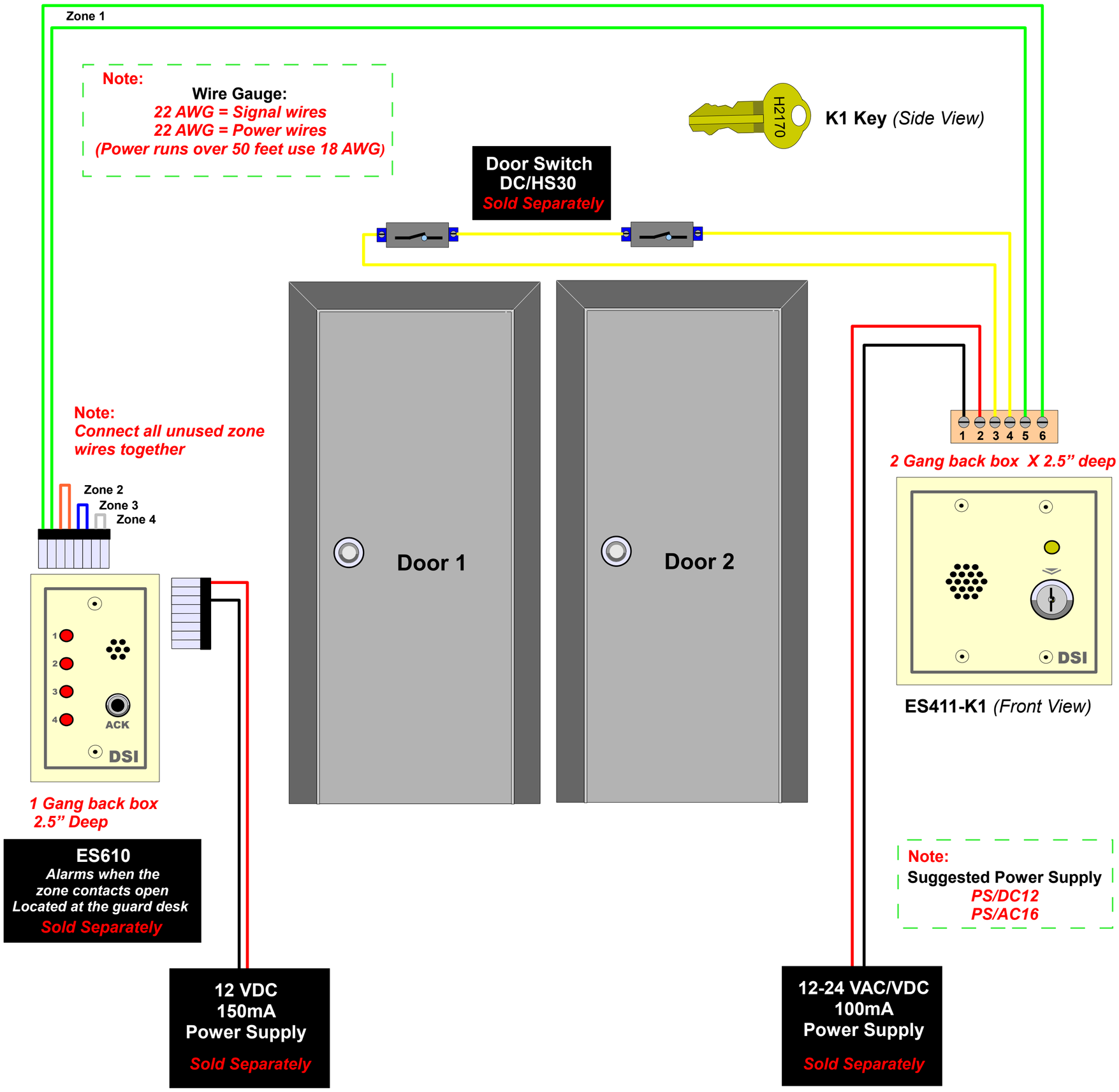

ES411-K1 *(Back View)*

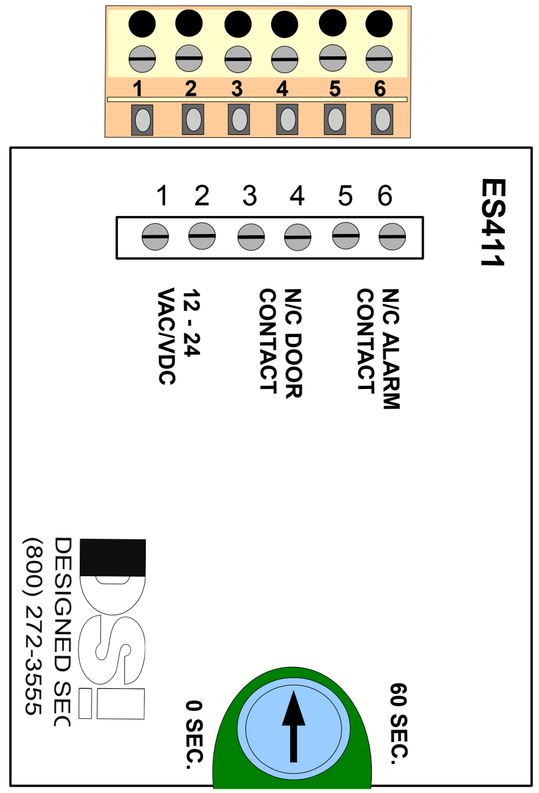

Alarm delay adjustment (0-60sec)

Note: In-line diodes are for 16-24 volt power supplies

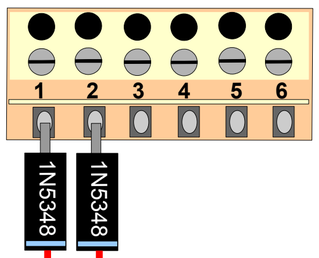

Diodes are included

16-24 VAC/VDC
100mA
Power Supply
Sold Separately